SIDUS

Professional Solutions for Hazardous Area & Subsea Systems

SS450 High Definition Color Zoom Camera

Sidus Solutions' SS450 offers stunning full 1080i/720p high defintion video via HD-SDI over fiberoptic cable. The camera features a 1/3" CMOS HD sensor with an impressive 10X optical zoom and auto focus. The rugged 6Al4V Titanium housing is rated to 6000m and is compact enough for mounting on ROV's. In addition to focus, zoom and iris, a variety of advanced camera features such as white balance and freeze frame are remotely accessible via RS-485 or optional single modefiber. The SS450 can be utilized as part of a complete Sidus system by mounting it with an SS109 pan & tilt and SS182 high output LED light.

Specifications

Camera module	1/3" CMOS HD Sensor
Number of total pixels	1920 H x 1080
Power	12-26 VDC, 500 mA
Video aspect ratio	16:9 or 4:3 (selectable)
Video output	HD-SDI Digital via SM fiber
Minimum illumination	12 lx (F1.8, 50 IRE)
Communication	RS-485 via Single Mode Fiber
S/N ratio	>50dB
Electronic Shutter	1/2 - 1/10,000
Sync system	Internal
Lens focal length	5.1m to 51.0 mm, F1.8 to F2.1
Optical zoom	10X
Angle of view	47˚ Diagonal in water
Object distance	10mm (wide) - 800mm (tele)
Digital zoom	12X
Iris	Automatic, manual
Focus	Automatic, manual
Housing material	Titanium 6Al4V (other options available)
Dimensions	3.90" (99mm) x 8.70" (221mm) (w/o connector)
Weight	7.5 lbs (3.4 kg) in air 5.0 lbs (2.3 kg) in water
Operating depth	18,000 feet/6000 meters
Storage temperature	-20˚ ~ 60˚ C
Operating temperature	0˚ ~ 45˚ C
Connector	Customer selectable (Opticon F.O. connector shown)

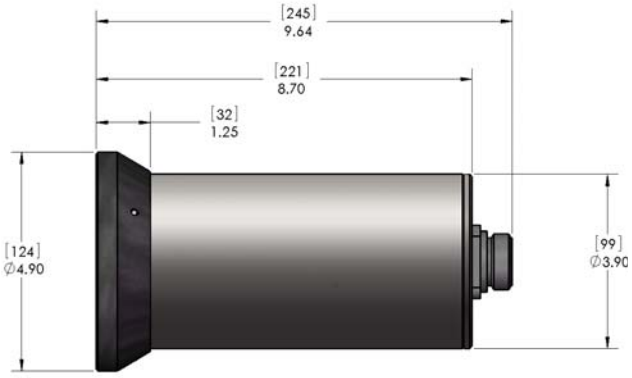

P O Box 60767
San Diego CA 92166
619.275.5533 phone
619.275.5544 fax

P O Box 925006
Houston TX 77292
281.596.7568 phone
281.596.7578 fax

www.sidus-solutions.com

Design and Specifications are subject to change.